TELEMETRY DAUGHTER (MEZZANINE) BOARD

Changelog:

SCHEMATIC Q26042-001 REV A :
PCB Q25090-001
NEW DESIGN

SCHEMATIC Q26042-001 REV B :
PCB Q25090-002
- ADD SOFTWARE RESET ABILITY TO WIFI.
- REMOVE 3.3V CONNECTIONS TO TAG-CONNECT DEBUG PORTS.
- CORRECTED NAME OF SIGNAL SPI1_CS1.
- ADDED 1500uF ON 5V BUS TO HELP POWER FAIL WARNING TIME.
- REMOVED SDIO INTERFACE OPTION FOR WIFI/BT CHIP.
- ADDED SHUNT AMPLIFIER.
- CHANGED LOCKOUT CIRCUITS TO USE 2N7002 TRANSISTOR.

SCHEMATIC Q26042-001 REV C :
PCB Q25090-003
- ADD USB CONNECTIONS TO CELL MODEM
- CHANGE MODEM TO QBG95
- CHANGE U7 TO A 6DoF IMU
- UPDATE HWD REV RESISTORS
- I2C_SA1_ACCEL_IMU net is a NC
- R71 and R72 removed
- C21 removed
- Add R84 and R85

SCHEMATIC Q26042-001 REV D :
PCB Q25090-004
- Remove R20
- Add R78, R80, C56, U14
- Use pin 39 of J8 for the USB VBUS enable
- Update REV bits

SCHEMATIC Q26042-001 REV E :
PCB Q25090-005
- DFM updates

SCHEMATIC Q26042-001 REV E :
PCB Q25090-005
- Change R6 to 0 ohm resistor

PCB
BOM
Q25090-005
PCB, Telemetry Board

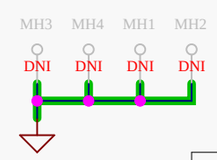

1-Title.SchDoc

PROPRIETARY INFORMATION

THE INFORMATION IN THIS DOCUMENT IS PROPERTY OF TENNANT COMPANY. IT IS SUBJECT TO RETURN UPON DEMAND AND MAY NOT BE REPRODUCED OR DISCLOSED TO OTHERS WITHOUT WRITTEN PERMISSION OF TENNANT COMPANY

Rev F	Title: TELEMETRY DAUGHTER BD HERCULES INTEGRATED TELEMETRY
Size: B	
Document Number: Q26042-001	Engineer: B.PAULSEN
Date: 3/23/2023	Sheet 1 of 5

CURRENT SHUNT AMPLIFIER

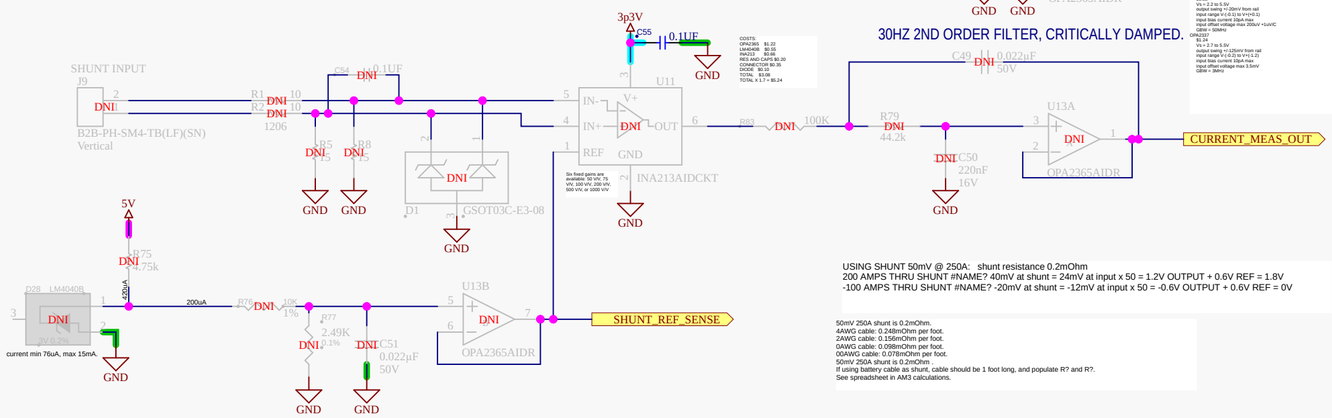

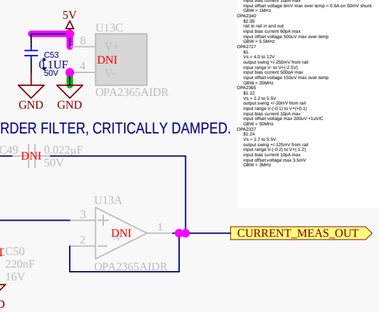

USING SHUNT 50mV @ 250A: shunt resistance 0.2mOhm
200 AMPS THRU SHUNT #NAME? 40mV at shunt = 24mV at input x 50 = 1.2V OUTPUT + 0.6V REF = 1.8V
-100 AMPS THRU SHUNT #NAME? -20mV at shunt = -12mV at input x 50 = -0.6V OUTPUT + 0.6V REF = 0V

50mV 250A shunt is 0.2mOhm.
4AWG cable: 0.248mOhm per foot.
2AWG cable: 0.156mOhm per foot.
0AWG cable: 0.098mOhm per foot.
00AWG cable: 0.078mOhm per foot.
50mV 250A shunt is 0.2mOhm .
If using battery cable as shunt, cable should be 1 foot long, and populate R? and R?.
See spreadsheet in AM3 calculations.

IMU: ACCELEROMETER, GYRO, MAGNETOMETER, TEMPERATURE

APD went to BNO080 for their prototype
before they cancelled the project.
The BNO055 used to periodically lose magnetic calibration.
Looks pin-compatible.

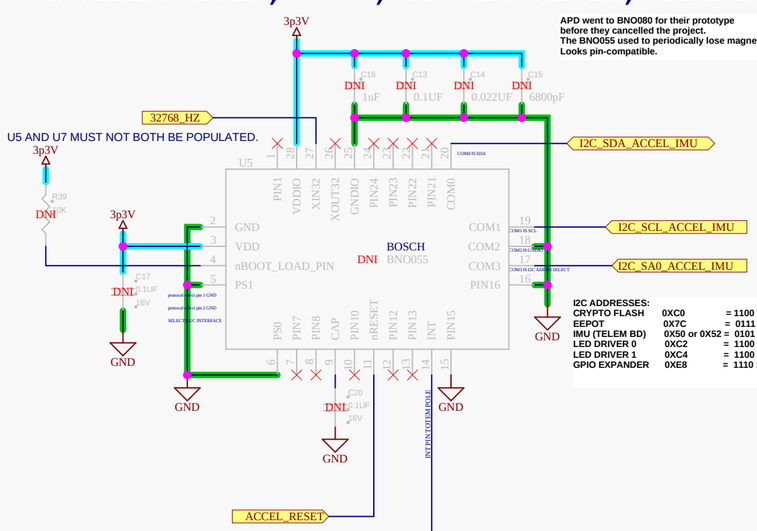

I2C ADDRESSES:

CRYPTO FLASH	0XC0	= 1100 000X
EEPOT	0X7C	= 0111 110X
IMU (TELEM BD)	0X50 or 0X52	= 0101 000X or 0101 001X
LED DRIVER 0	0XC2	= 1100 001X
LED DRIVER 1	0XC4	= 1100 010X
GPIO EXPANDER	0XE8	= 1110 100X

ACCELEROMETER

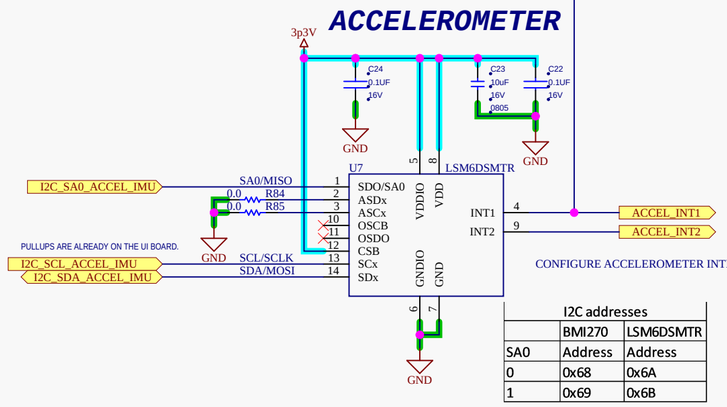

CONFIGURE ACCELEROMETER INTERRUPTS TO BE TOTEM POLE

I2C addresses		
	BMI270	LSM6DSMTR
SA0	Address	Address
0	0x68	0x6A
1	0x69	0x6B

CONNECTIONS TO MOTHER BOARD

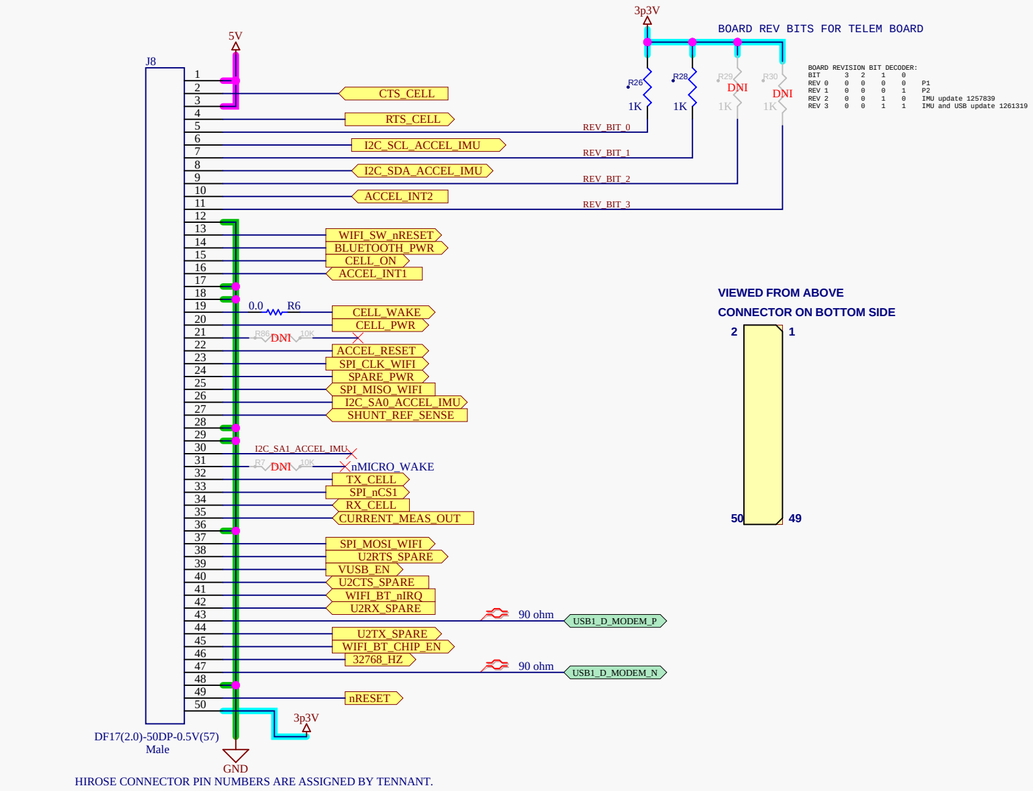

BOARD REVISION BIT DECODER:

BIT	3	2	1	0	
REV 0	0	0	0	0	P1
REV 1	0	0	0	1	P2
REV 2	0	0	1	0	IMU update 1257839
REV 3	0	0	1	1	IMU and USB update 1261319

HIROSE CONNECTOR PIN NUMBERS ARE ASSIGNED BY TENNANT.

2-Tel Hardware.SchDoc

PROPRIETARY INFORMATION

THE INFORMATION IN THIS DOCUMENT IS PROPERTY OF TENNANT COMPANY. IT IS SUBJECT TO RETURN UPON DEMAND AND MAY NOT BE REPRODUCED OR DISCLOSED TO OTHERS WITHOUT WRITTEN PERMISSION OF TENNANT COMPANY

TENNANT

Rev F	Title: TELEMETRY DAUGHTER BD — HERCULES INTEGRATED TELEMETRY
Size: C	
Document Number: Q26042-001	Engineer: B.PAULSEN
Date: 3/23/2023	Sheet 2 of 5

CELL MODEM

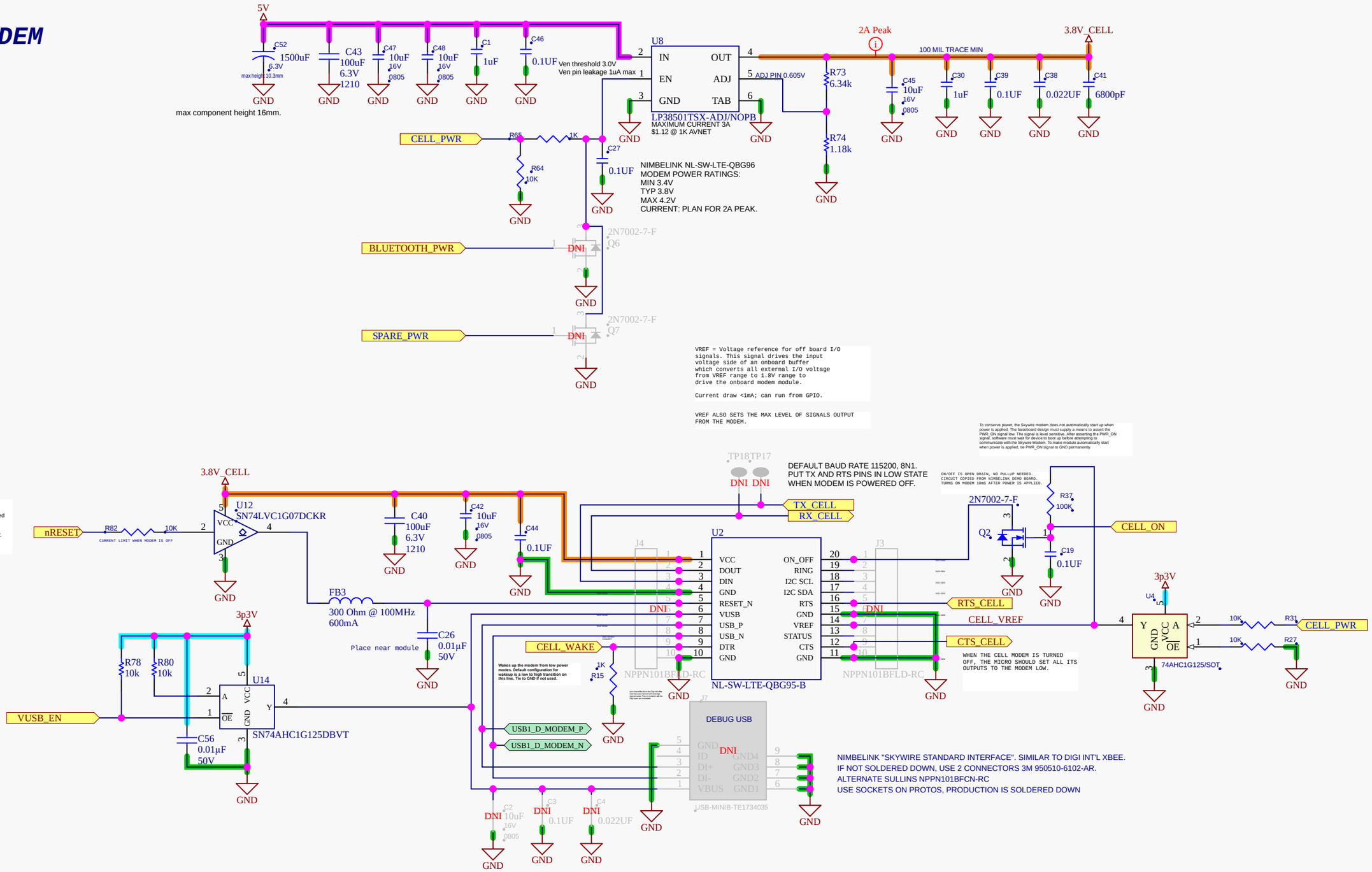

3-Tel Cell_Modem.SchDoc

PROPRIETARY INFORMATION

THE INFORMATION IN THIS DOCUMENT IS PROPERTY OF TENNANT COMPANY. IT IS SUBJECT TO RETURN UPON DEMAND AND MAY NOT BE REPRODUCED OR DISCLOSED TO OTHERS WITHOUT WRITTEN PERMISSION OF TENNANT COMPANY

Rev F	Title: TELEMETRY DAUGHTER BD HERCULES INTEGRATED TELEMETRY
Size: C	
Document Number: Q26042-001	Engineer: B.PAULSEN
Date: 3/23/2023	Sheet 3 of 5

BLUETOOTH/ WIFI COMBO

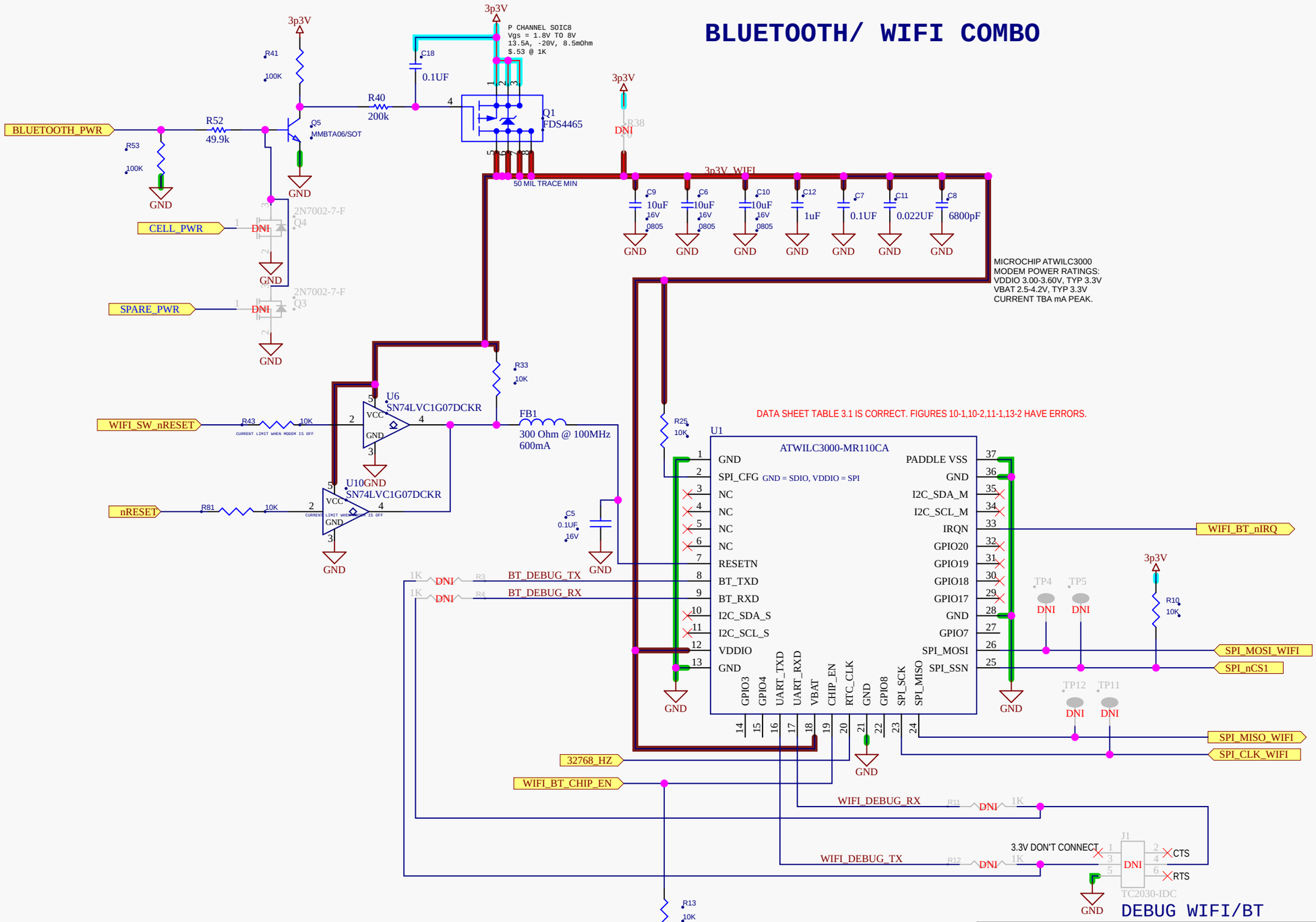

DEBUG WIFI/BT

PROPRIETARY INFORMATION

THE INFORMATION IN THIS DOCUMENT IS PROPERTY OF TENNANT COMPANY. IT IS SUBJECT TO RETURN UPON DEMAND AND MAY NOT BE REPRODUCED OR DISCLOSED TO OTHERS WITHOUT WRITTEN PERMISSION OF TENNANT COMPANY

TENNANT

Rev	F
Size:	C
Title	TELEMETRY DAUGHTER BD HERCULES INTEGRATED TELEMETRY
Document Number	Q26042-001
Engineer	B.PAULSEN
Date:	3/23/2023
Sheet	4 of 5

4-Tel WiFi_Bluetooth.SchDoc

SPARE RADIO. XBEE FORMAT.

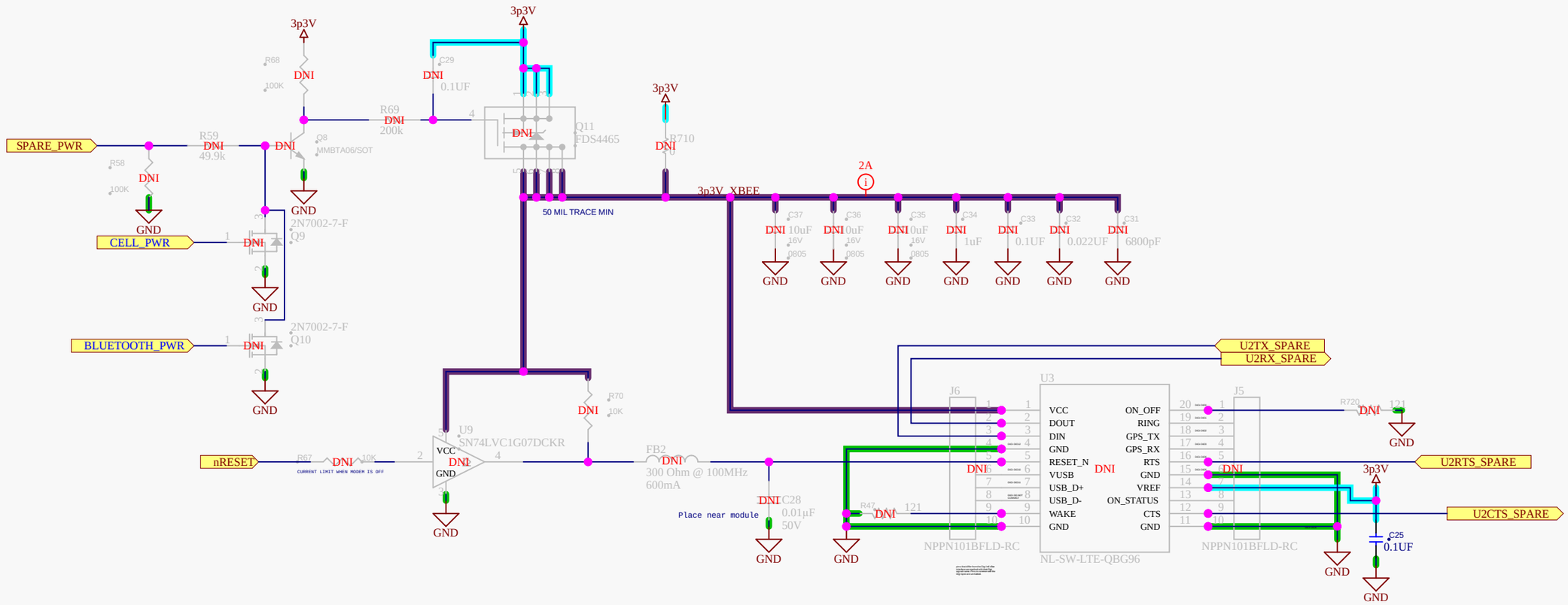

NIMBELINK "SKYWIRE STANDARD INTERFACE". SIMILAR TO DIGI INT'L XBEE.
IF NOT SOLDERED DOWN, USE 2 CONNECTORS 3M 950510-6102-AR.
ALTERNATE SULLINS NPPN101BFCN-RC
USE SOCKETS ON PROTOS, PRODUCTION IS SOLDERED DOWN

5-Spare_radio.SchDoc

PROPRIETARY INFORMATION

THE INFORMATION IN THIS DOCUMENT IS PROPERTY OF TENNANT COMPANY. IT IS SUBJECT TO RETURN UPON DEMAND AND MAY NOT BE REPRODUCED OR DISCLOSED TO OTHERS WITHOUT WRITTEN PERMISSION OF TENNANT COMPANY

Rev F	Title: TELEMETRY DAUGHTER BD HERCULES INTEGRATED TELEMETRY	
Size: B		
Document Number Q26042-001		Engineer B.PAULSEN
Date: 3/23/2023		Sheet 5 of 5